Cambridgeport

SUBMITTAL

SUBMITTED TO _____

COMPANY _____

JOB NAME _____

EQUIPMENT _____

SIGNATURE _____

DATE _____

ROOF CURB FOR YORK ROOFTOP UNITS

BCH, DEE, DEG, DCE, DCG 180
DM, DH, BP, ZF 180

PART # CAS	PART # YORK	PART # INSULATED	CURB HEIGHT "A"
1000006	1RCO436	1000857	14”
1004361	N/A	1004362	8”
1001571	N/A	1004363	18”
1000191	1RCO477	1004364	24”

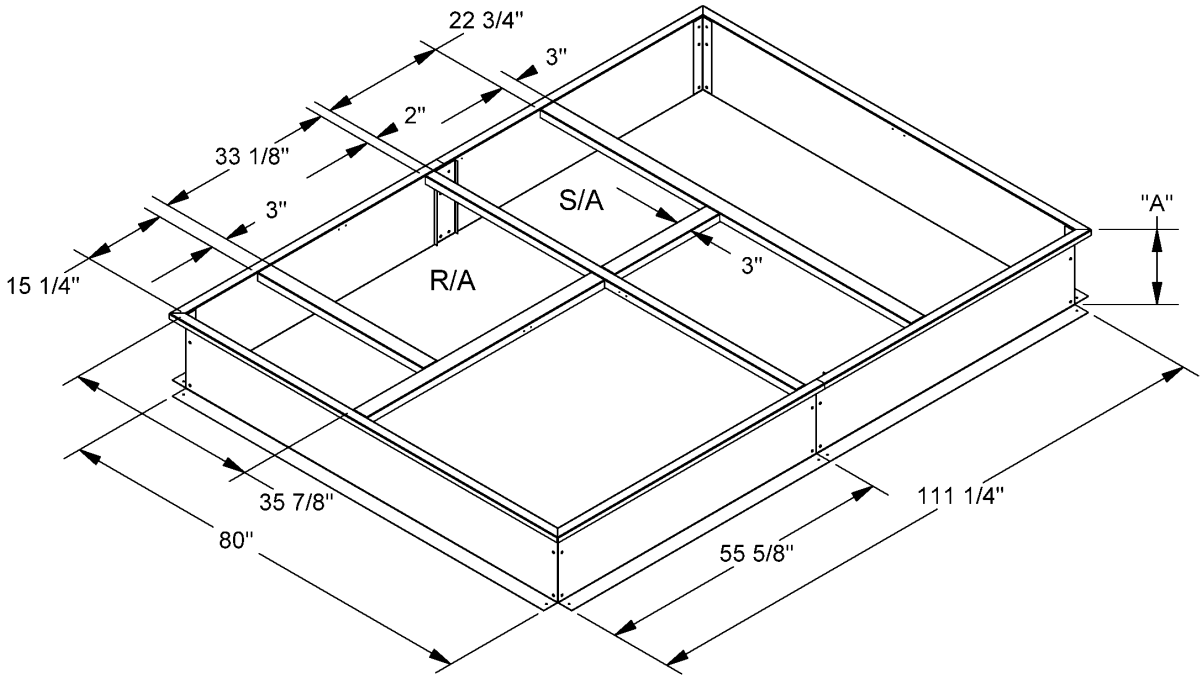

FEATURES

MITERED TOP CORNERS
ROOF CURB IS FABRICATED OF 18GA G90 GALVANIZED STEEL
FULL PERIMETER WOOD NAILER
PRE-PUNCHED ASSEMBLY HOLES AND HARDWARE INCLUDED FOR - DUCT SUPPORT INSTALLATION
ROOF CURB IS SHIPPED UNASSEMBLED
* CURBS ARE INTERNALLY INSULATED WITH 1” THICK 1-1/2 LB DENSITY DUCT LINER

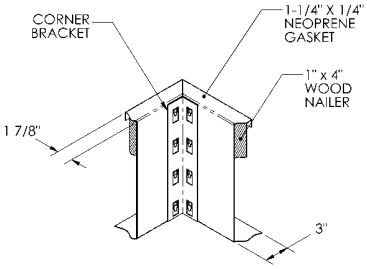

CURB CORNER SECTION