(A)

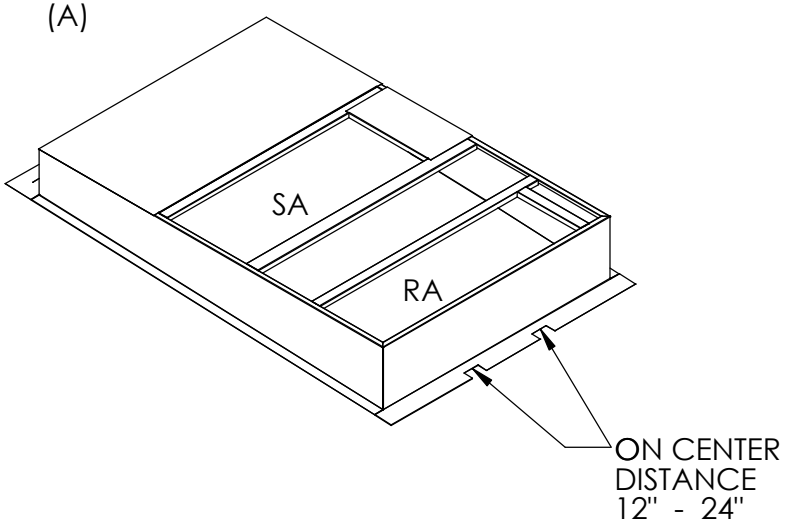

(B)

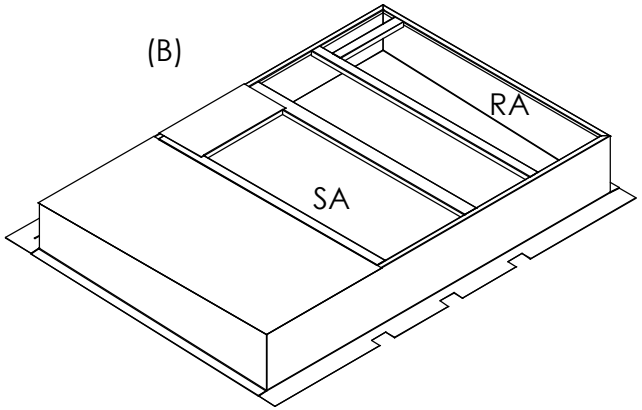

(C)

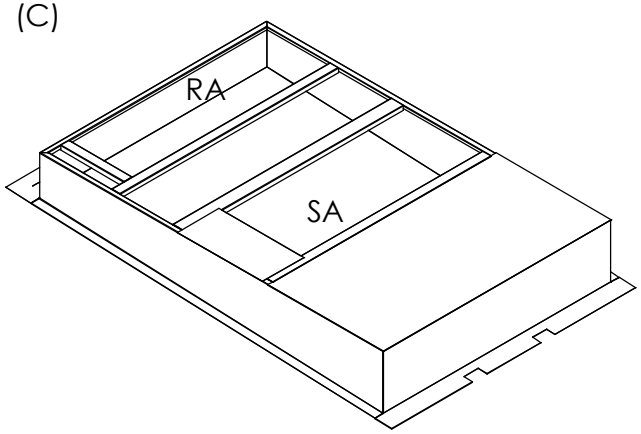

(D)

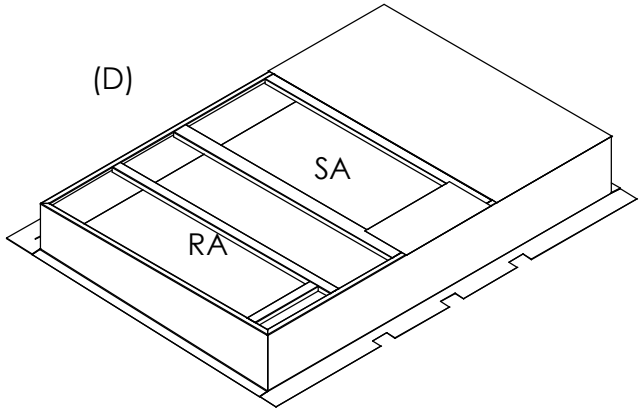

1014841

PDF created with pdfFactory Pro trial version www.pdffactory.com