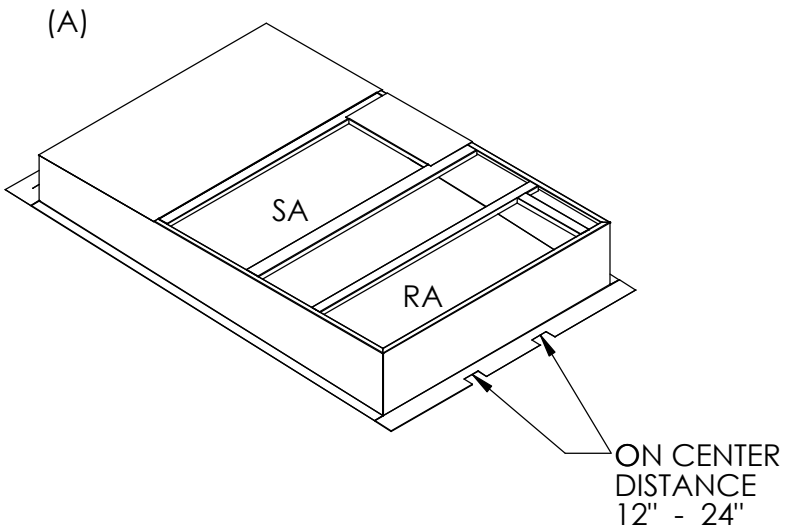


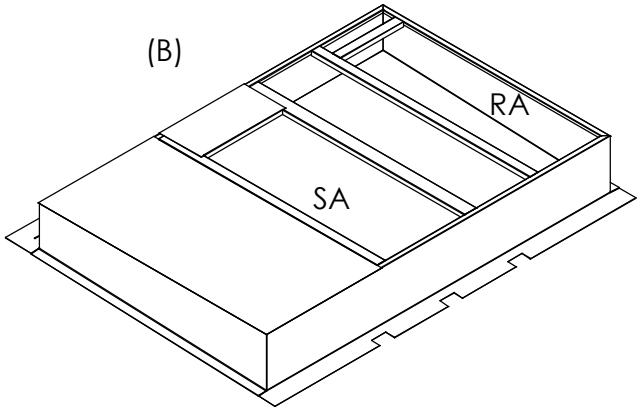


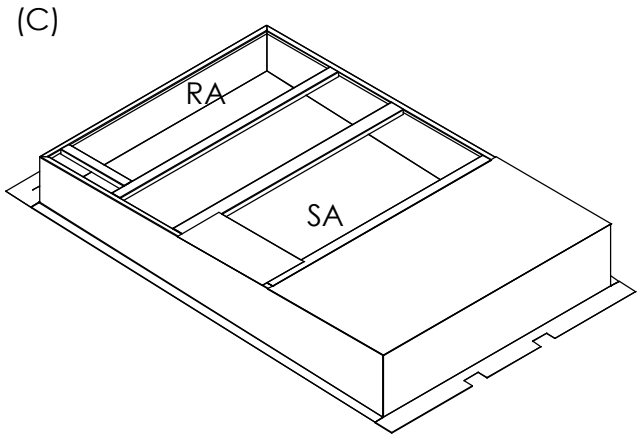


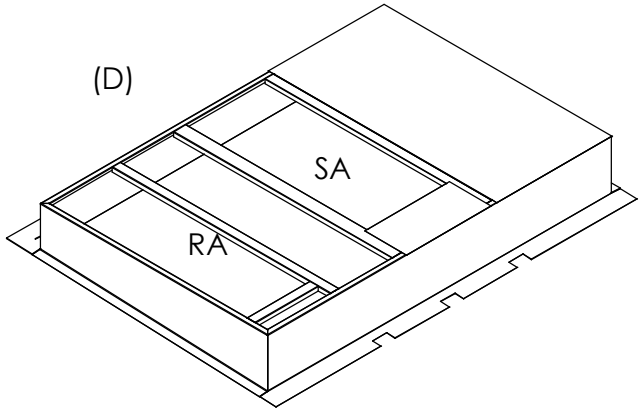


1014858

PDF created with pdfFactory Pro trial version www.pdffactory.com