Cambridgeport

SUBMITTAL

Part Number
2009826

SUBMITTED TO _____

COMPANY _____

JOB NAME _____

EQUIPMENT _____

SIGNATURE _____

DATE _____

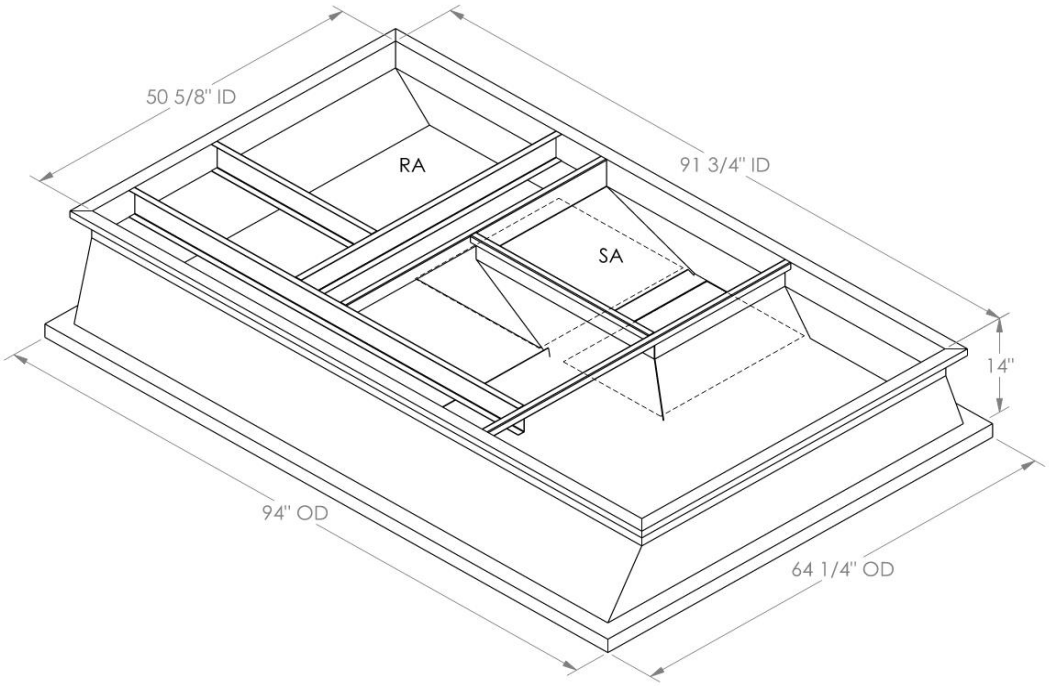

FEATURES

ONE PIECE WELDED CONSTRUCTION

FACTORY INSTALLED SUPPLY TRANSITIONS

FULLY INSULATED

DESIGNED FOR EVEN WEIGHT DISTRIBUTION

FABRICATED OF HEAVY GAUGE G90 GALVANIZED STEEL

ALL WELDS SPRAYED WITH GALVANIZING COMPOUND

GASKET PROVIDED FOR UNIT TO ADAPTER SEALING

CAMBRIDGEPORT STRONGLY RECOMMENDS CONFIRMING THE DIMENSIONS ON THIS SUBMITTAL

CURB ADAPTERS ARE BASED ON UNIT MANUFACTURERS STANDARD CURB DIMENSIONS.
CAMBRIDGEPORT CANNOT BE RESPONSIBLE FOR ANY DEVIATIONS FROM FACTORY DIMENSIONS OR INCORRECT MODEL NUMBERS.